CNC ALUMINUM HOPUP CHAMBER MI - PRO

COPYRIGHT © 2018

1 INNER BARREL INSTALLATION

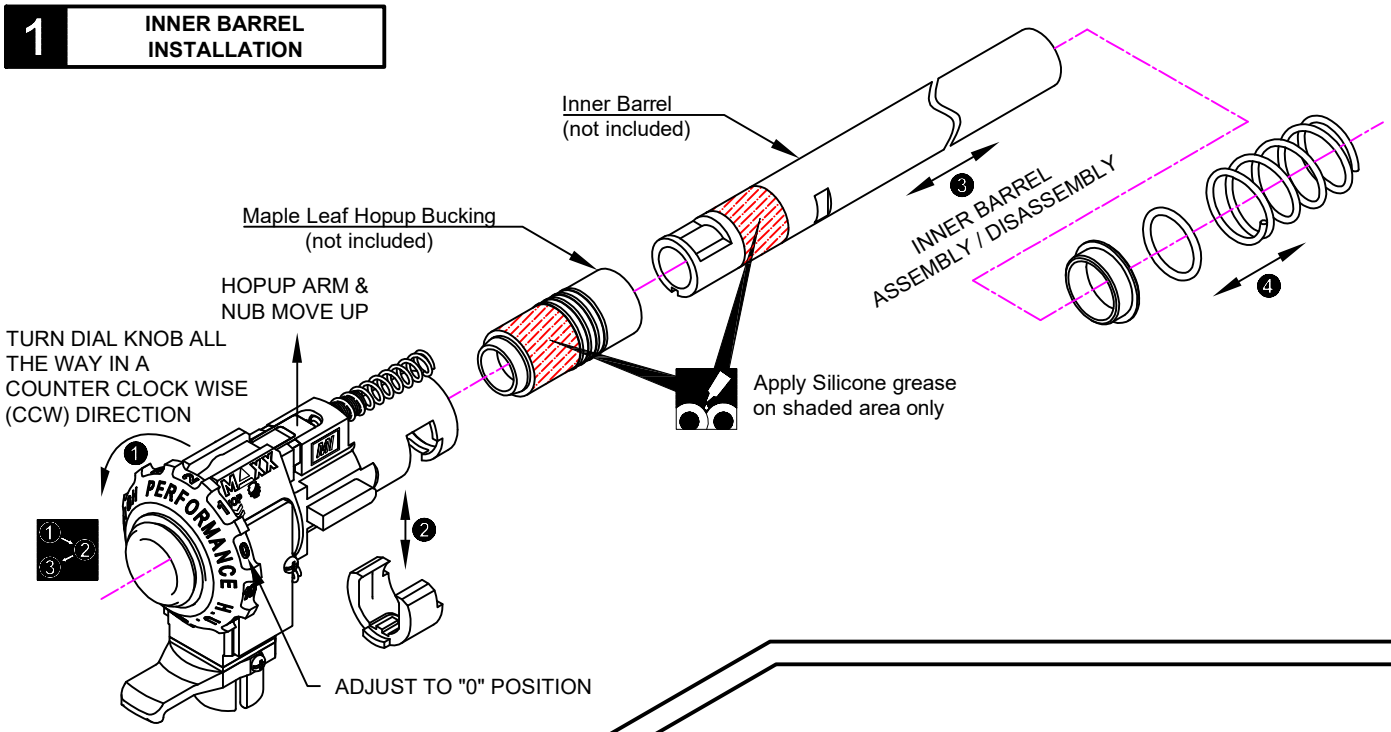

STANDARD HOP: *ADJUST DIAL KNOB SETTING **1 - 6***

R-HOP: *ADJUST DIAL KNOB SETTING **0 - 6***

FLAT HOP: *ADJUST DIAL KNOB SETTING **4 - 9***

2 DIAL KNOB SETTING & HOPUP ARM INSTALLATION

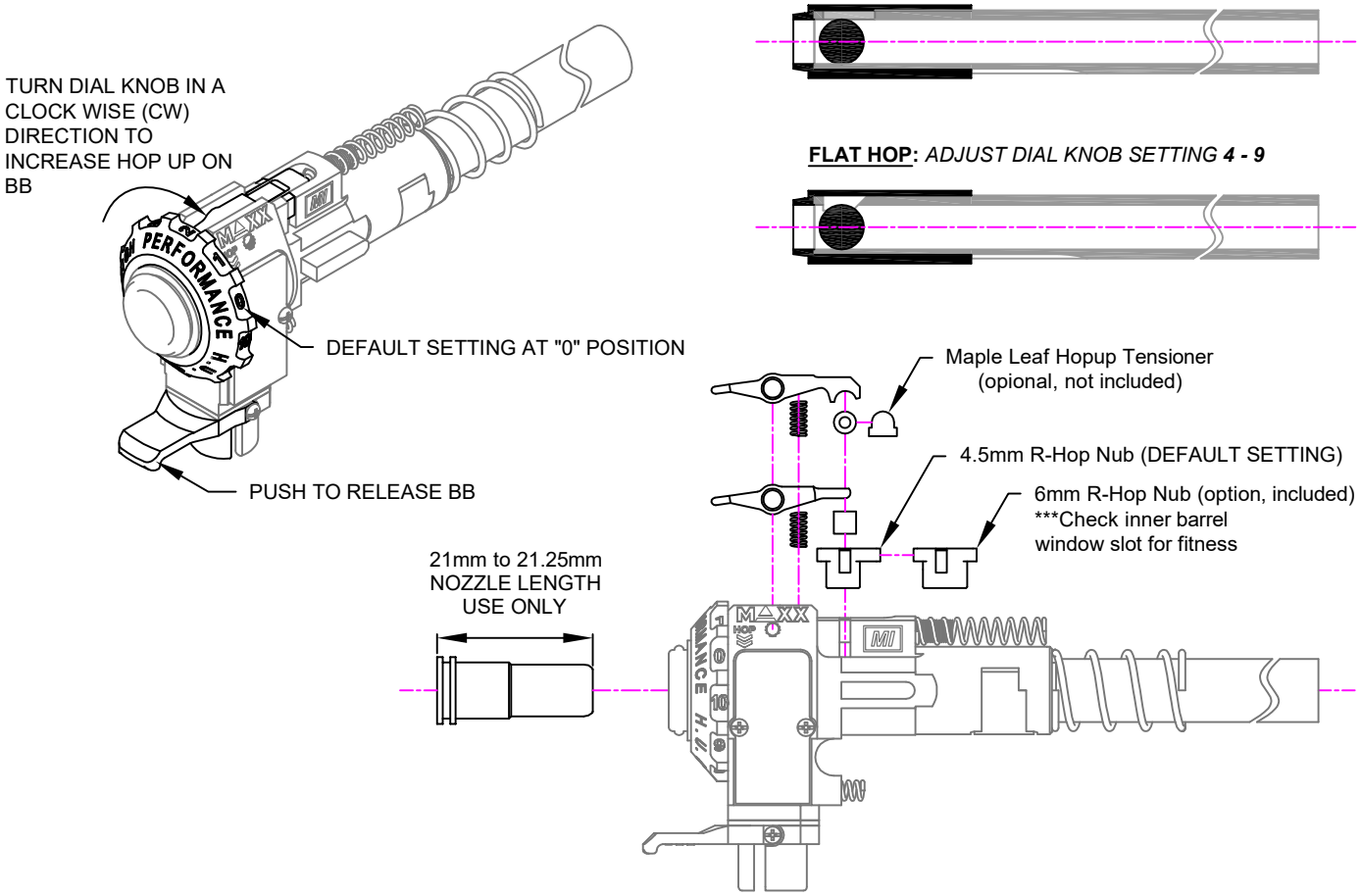

Assemble in this order Apply Silicone grease

CAUTION: Please check your model carefully before operation!