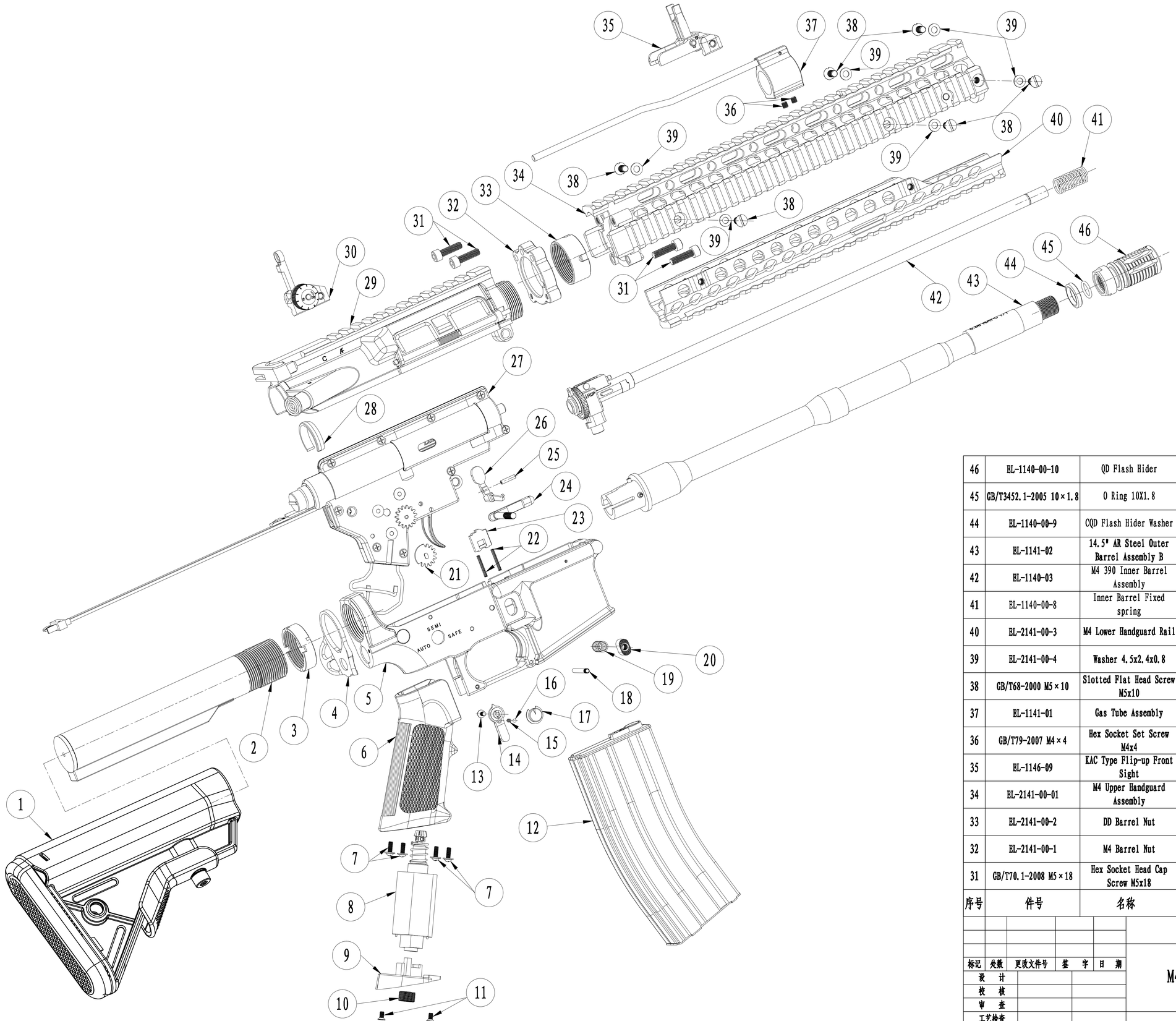

序号	件号	名称	数量	序号	件号	名称	数量
46	EL-1140-00-10	QD Flash Hider	1	16	GB/T308.1-2013 Φ2.5	Steel Ball Φ2.5	1
45	GB/T3452.1-2005 10×1.8	O Ring 10X1.8	1	15	EL-1140-00-4	M4 Selector Spring	1
44	EL-1140-00-9	CQD Flash Hider Washer	1	14	EL-1140-00-1	M4 Selector (Left)	1
43	EL-1141-02	14.5" AR Steel Outer Barrel Assembly B	1	13	GB/T70.3-2008 M3×6	Hex Flat Head Screw M3x6	1
42	EL-1140-03	M4 390 Inner Barrel Assembly	1	12	EL-1140-07	120rds AR15 AEG Magazine	1
41	EL-1140-00-8	Inner Barrel Fixed spring	1	11	GB/T70.3-2008 M3×8	Hex Flat Head Screw M3x8	2
40	EL-2141-00-3	M4 Lower Handguard Rail	1	10	EL-1140-00-12	Motor Plate Slotted Screw	1
39	EL-2141-00-4	Washer 4.5x2.4x0.8	6	9	EL-1140-00-11	A2 Grip Motor Plate	1
38	GB/T68-2000 M5×10	Slotted Flat Head Screw M5x10	6	8	EL-1140-05	AR High Torque Motor Long	1
37	EL-1141-01	Gas Tube Assembly	1	7	SJ 2830-1987 M3×8	Phlips Round Washer Head Screw M3x8	4
36	GB/T79-2007 M4×4	Hex Socket Set Screw M4x4	2	6	EL-1140-11	A2 Pistol Grip	1
35	EL-1146-09	KAC Type Flip-up Front Sight	1	5	EL-1140-04	M4A1 Lower Receiver Assembly	1
34	EL-2141-00-01	M4 Upper Handguard Assembly	1	4	EL-2141-02-01-1	CQD Type Receiver Plate	1
33	EL-2141-00-2	DD Barrel Nut	1	3	EL-2140-03-01-7	Castle Nut	1
32	EL-2141-00-1	M4 Barrel Nut	1	2	EL-1140-02	M4 Buffer Tube Assembly	1
31	GB/T70.1-2008 M5×18	Hex Socket Head Cap Screw M5x18	4	1	EL-1146-01	Slim SOPMOD Stock	1
30	EL-1140-09	KAC Type Flip-up Rear Sight	1				
29	EL-1140-01	M4A1 Upper Receiver Assembly	1				
28	EL-1140-00-21	M4 Gearbox C-Clamp	1				
27	EL-2	Ver.2 Upgraded Gear Box Assembly(2/3 Cylinder)	1				
26	EL-1140-00-17	Bolt Catch Left	1				
25	GB/T879.2-2000 2.5×12	Elastic Cylindrical Pin 2.5x12	1				
24	EL-1140-00-13	Magazine Release	1				
23	EL-1140-00-18	Bolt Catch Block	1				
22	EL-1140-00-19	Bolt Catch Block Spring	2				
21	EL-1140-00-20	Selector Gear (Right)	1				
20	EL-1140-00-7	Magazine Release Button	1				
19	EL-1140-00-6	Magazine Catch Spring	1				
18	EL-1140-00-5	Knurled Pin Φ3×27.2	1				
17	EL-1140-00-3	M4 Selector (Right)	1				

标记	处数	更改文件号	签 字	日 期
设 计				
校 核				
审 查				
工艺检查				
标准检查				
审 定				
批 准				

00

EL-A141

M4 Sopmod II

所属装配号: 00

图样标记 | 重量 | 比例: 1:2

共 1 张 | 第 1 张