MODEL: SL450PA-7516E-87SD-BB DWG No.: **DJ0005** DATE: 2014-8-20

1、*Outline Drawing*(外形图)

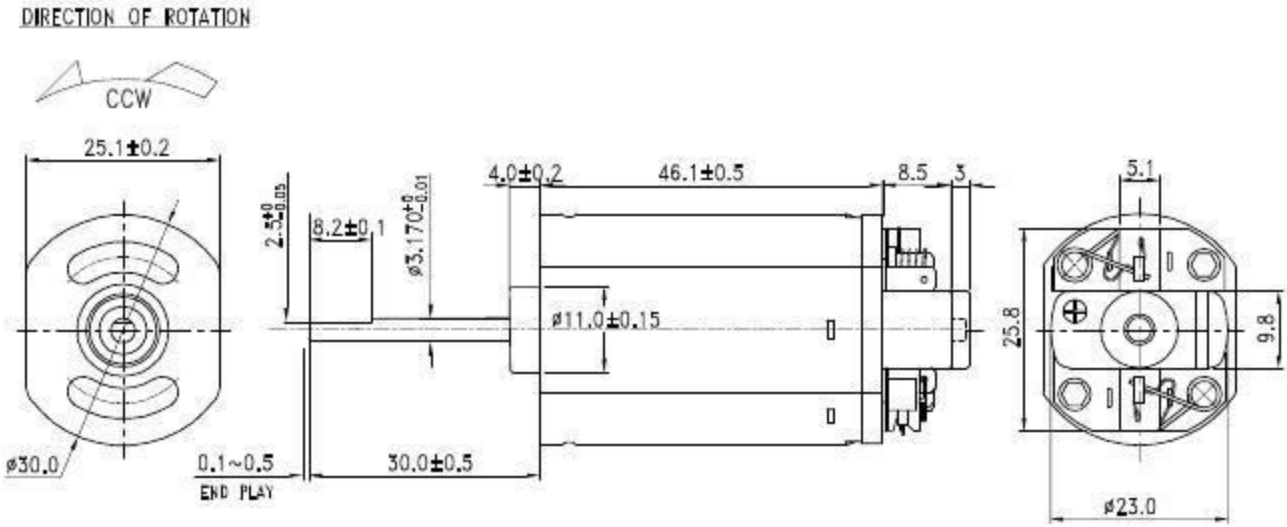

2、*Electrical Specification:*(电气性能规格)

VOLTAGE (电压)	NO LOAD		LOAD TESTING WITH FAN: 29.5x50		
	SPEED	CURRENT	SPEED	CURRENT	TORQUE
	rpm	A	rpm	A	g-cm
8.4V DC CONSTANT	23600±12%	4.5 A max.	21200±10%	20.5 A max.	439

3、*Performance Curves:* (性能曲线)

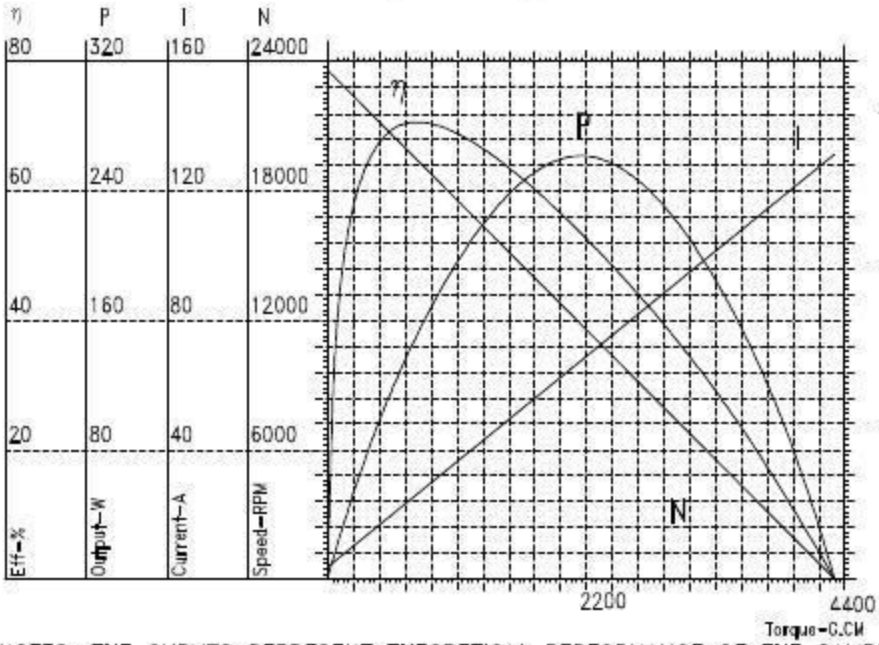

AT NO LOAD(空载)
SPEED (转速) = 23600 RPM
CURRENT(电流) = 3.5 AMP

AT STALL EXTRAPOLATION (堵转点)
TORQUE (扭力) = 4315 G.CM
CURRENT(电流) = 131 AMP

AT MAXIMUM EFFICIENCY (最大效率点)
EFFICIENCY(效率) = 70 %
SPEED (转速) = 20288 RPM
TORQUE (扭力) = 606 G.CM
CURRENT(电流) = 21.4 AMP
OUTPUT (功率) = 126.2 WATTS

NOTES: THE CURVES REPRESENT THEORETICAL PERFORMANCE OF THE SAMPLE ONLY
CUSTOMER:

PREPARED: 尹智强 REVIEWED: 龙光伟 APPROVED: 陈焕梦

MODEL: SL450PA-7516E-72.5SD-BB DWG No.: **DJ0006** DATE: 2014-8-20

1、*Outline Drawing*(外形图)

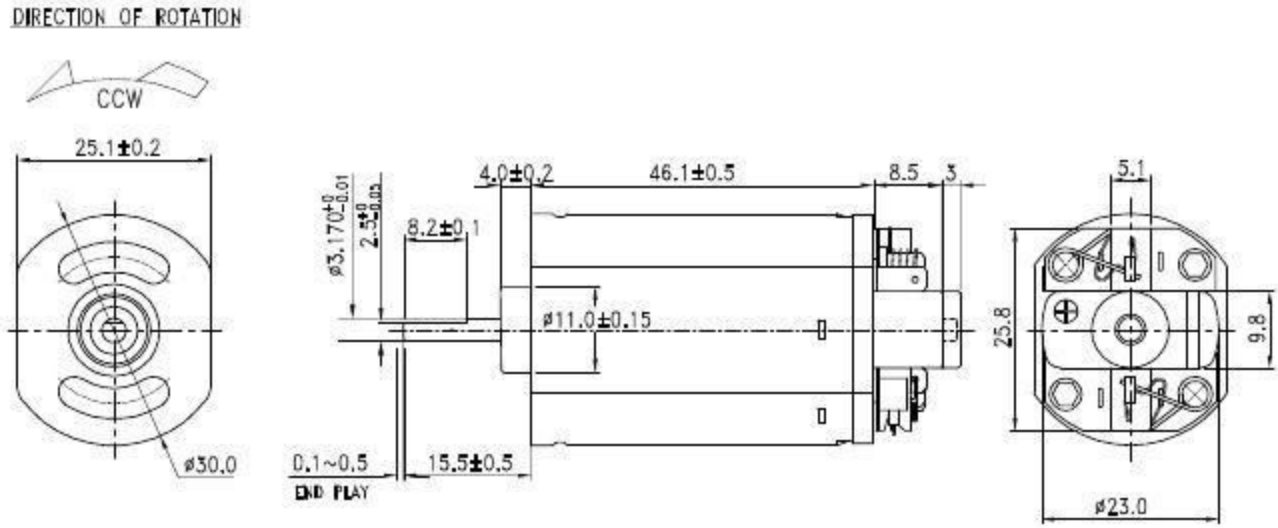

2、*Electrical Specification:*(电气性能规格)

VOLTAGE (电压)	NO LOAD		LOAD TESTING WITH FAN: 29.5x50		
	SPEED	CURRENT	SPEED	CURRENT	TORQUE
	rpm	A	rpm	A	g-cm
8.4V DC CONSTANT	23600±12%	4.5 A max.	21200±10%	20.5 A max.	439

3、*Performance Curves:* (性能曲线)

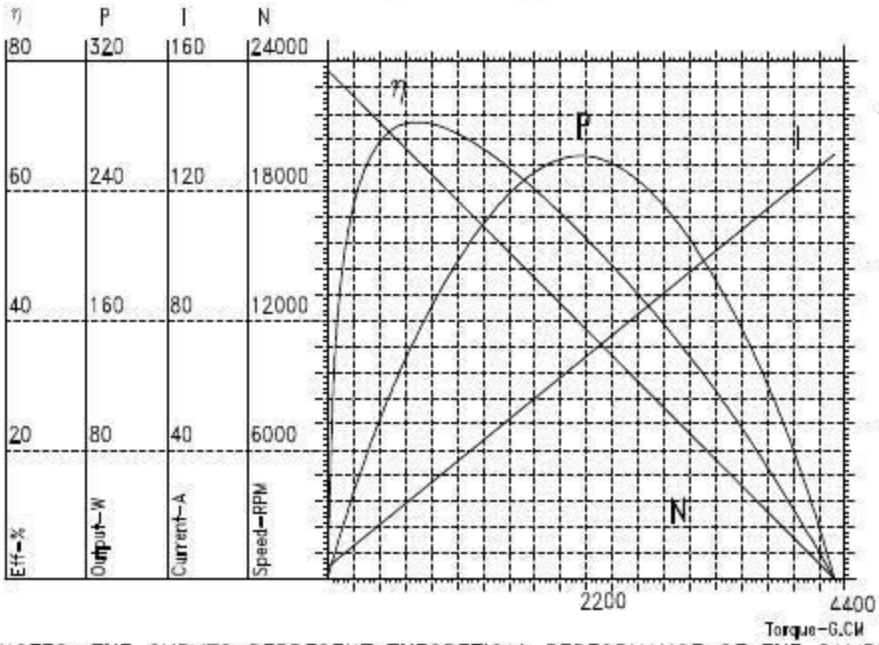

AT NO LOAD(空载)
SPEED (转速) = 23600 RPM
CURRENT(电流) = 3.5 AMP

AT STALL EXTRAPOLATION (堵转点)
TORQUE (扭力) = 4315 G.CM
CURRENT(电流) = 131 AMP

AT MAXIMUM EFFICIENCY (最大效率点)
EFFICIENCY(效率) = 70 %
SPEED (转速) = 20288 RPM
TORQUE (扭力) = 606 G.CM
CURRENT(电流) = 21.4 AMP
OUTPUT (功率) = 126.2 WATTS

NOTES: THE CURVES REPRESENT THEORETICAL PERFORMANCE OF THE SAMPLE ONLY
CUSTOMER:

PREPARED: 尹智强 REVIEWED: 龙光伟 APPROVED: 陈焕芬

MODEL: SL450PA-9011E-87SD-BB DWG No.: **DJ0007** DATE: 2014-8-20

1、*Outline Drawing*(外形图)

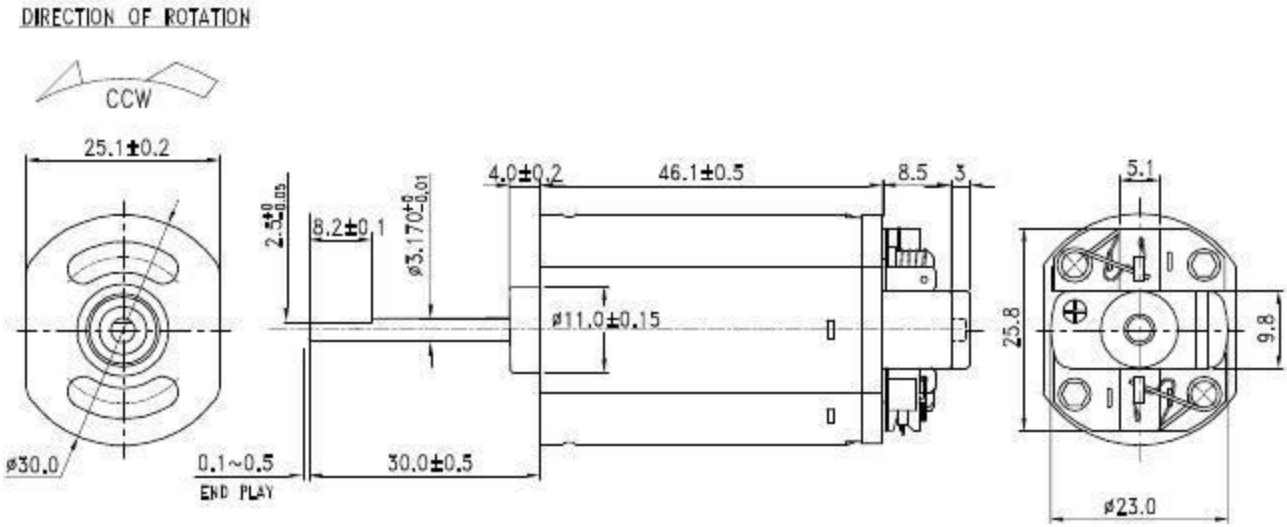

2、*Electrical Specification:*(电气性能规格)

VOLTAGE (电压)	NO LOAD		LOAD TESTING WITH FAN: 29.5x50 by voltage 4.2VDC		
	SPEED	CURRENT	SPEED	CURRENT	TORQUE
	rpm	A	rpm	A	g-cm
8.4V DC CONSTANT	34900±12%	6.9 A max.	15500±10%	17.5 A max.	224

3、*Performance Curves:* (性能曲线)

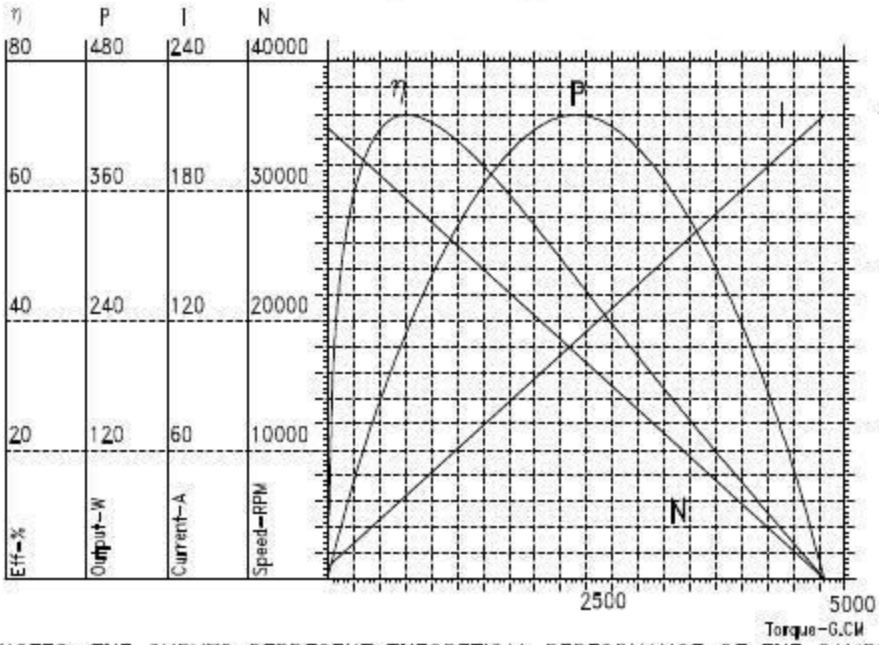

AT NO LOAD(空载)
SPEED (转速) = 34900 RPM
CURRENT(电流) = 5.2 AMP

AT STALL EXTRAPOLATION (堵转点)
TORQUE (扭力) = 4801 G.CM
CURRENT(电流) = 215 AMP

AT MAXIMUM EFFICIENCY (最大效率点)
EFFICIENCY(效率) = 71 %
SPEED (转速) = 30203 RPM
TORQUE (扭力) = 646 G.CM
CURRENT(电流) = 33.4 AMP
OUTPUT (功率) = 200.5 WATTS

NOTES: THE CURVES REPRESENT THEORETICAL PERFORMANCE OF THE SAMPLE ONLY
CUSTOMER:

PREPARED: 尹智强 REVIEWED: 龙光伟 APPROVED: 陈焕梦

MODEL: SL450PA-9011E-72.5SD-BB DWG No.: **DJ0008** DATE: 2014-8-20

1、*Outline Drawing*(外形图)

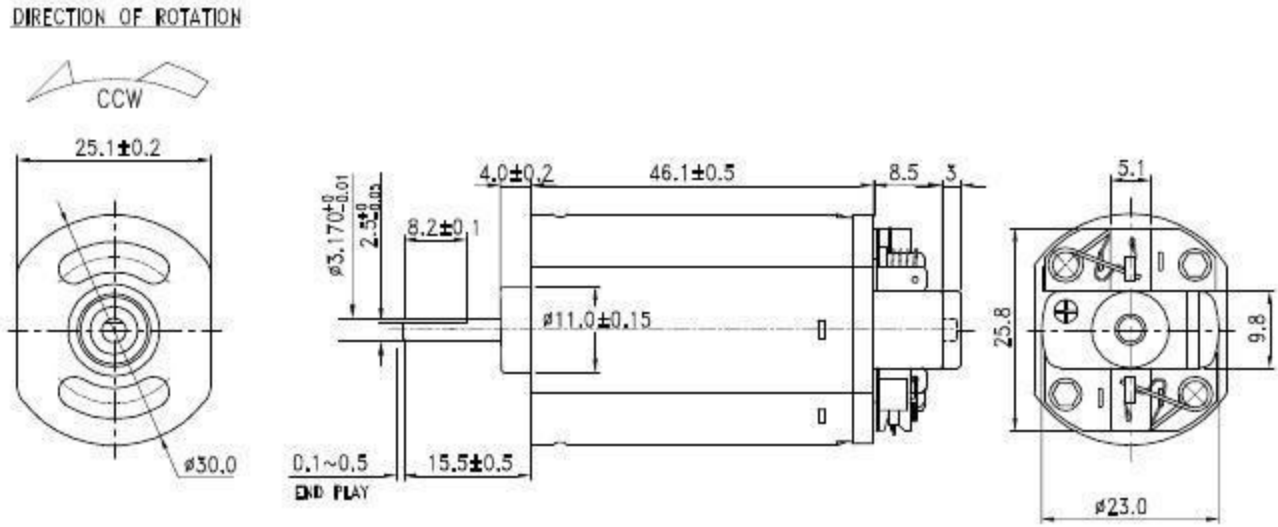

2、*Electrical Specification:*(电气性能规格)

VOLTAGE (电压)	NO LOAD		LOAD TESTING WITH FAN: 29.5x50 by voltage 4.2VDC		
	SPEED	CURRENT	SPEED	CURRENT	TORQUE
	rpm	A	rpm	A	g-cm
8.4V DC CONSTANT	34900±12%	6.9 A max.	15500±10%	17.5 A max.	224

3、*Performance Curves:* (性能曲线)

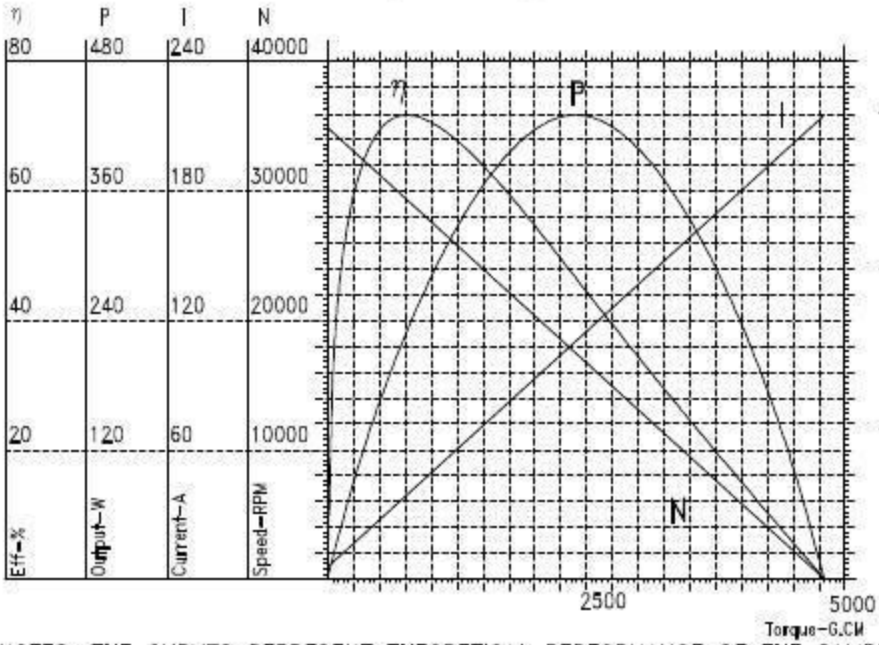

AT NO LOAD(空载)
SPEED (转速) = 34900 RPM
CURRENT(电流) = 5.2 AMP

AT STALL EXTRAPOLATION (堵转点)
TORQUE (扭力) = 4801 G.CM
CURRENT(电流) = 215 AMP

AT MAXIMUM EFFICIENCY (最大效率点)
EFFICIENCY(效率) = 71 %
SPEED (转速) = 30203 RPM
TORQUE (扭力) = 646 G.CM
CURRENT(电流) = 33.4 AMP
OUTPUT (功率) = 200.5 WATTS

NOTES: THE CURVES REPRESENT THEORETICAL PERFORMANCE OF THE SAMPLE ONLY
CUSTOMER:

PREPARED: 尹智强 REVIEWED: 龙光伟 APPROVED: 陈焕芬